RESOLUTION NO. 1634

A RESOLUTION APPROVING CROELL REDI-MIX, INC SITE PLAN

WHEREAS, Croell Redi-Mix, Inc. has heretofore submitted a proposed Site plan at 145 Fawcett Drive in the City of West Branch, Iowa (the "Project"); and

WHEREAS, said Site Plan has heretofore been reviewed by City Staff, including the City Engineer; and

WHEREAS, the Site Plan has been found to conform to the West Branch Code of Ordinances; and

WHEREAS, The City of West Branch Planning and Zoning Commission has reviewed the Site Plan and recommended its approval to the West Branch City Council; and

WHEREAS, it is now necessary for the City Council to approve said Site Plan.

NOW, THEREFORE, BE IT RESOLVED, by the City Council of the City of West Branch, Cedar County, Iowa, that the aforementioned Site Plan for the Project is hereby accepted and approved.

* * * * * * * *

Passed and approved this 26th day of June, 2017.

Roger Laughlin

Roger Laughlin, Mayor

ATTEST:

Redmond Jones II

Redmond Jones II, City Administrator/Clerk

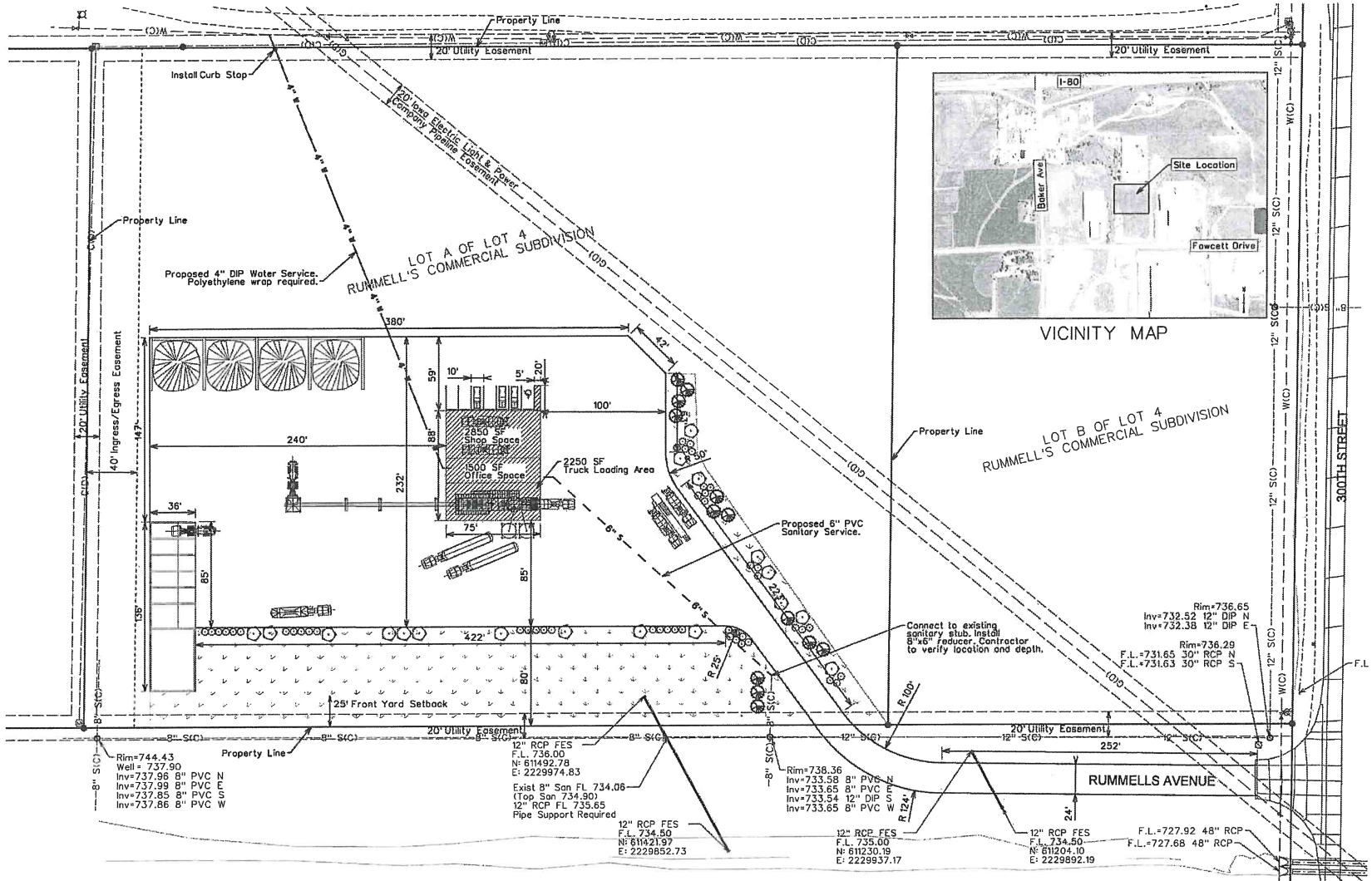

Owner/Applicant:
Croell, Inc.
P.O. Box 430
2010 Kenwood Avenue
New Hampton, Iowa 50659

Prepared By:
Lacy Croell, P.E.
Snyder & Associates, Inc.
5005 Bowling St., Suite A
Cedar Rapids, Iowa 52404

0 40
SCALE (FEET)

Structure Information:
1. Building use: office, machine shop, and a loading (batch) area
2. Total floor area: 6,600 SF
3. Estimated number of employees: 5

Site Information:
1. The project is not located in a Flood Zone.
2. 6" PCC Pavement with 6" of Modified Subbase to be used.

Variances:
1. No Curb & Gutter to be installed
2. Park Stops to be utilized for parking areas adjacent to building

Landscaping
1. Open Space
   25% Open Space Required
   170,125/4 = 42,531 SF Required
   46,500 SF Open Space Provided
2. Trees Required:
   1 per 1,500 SF of Open Space
   46,500/1,500 = 31 Trees Required
   13 Trees 1.5"-2" Caliper Diameter Req'd
   18 Trees 1"-1.5" Caliper Diameter Req'd
   Total of 31 Trees Provided
3. Shrubs Required:
   1 per 1,000 SF of Open Space
   46,500/1,000 = 47 Shrubs Required
   47 Shrubs Provided

Site Address:
145 Fowcett Drive

Legal Description:
Lot A of Lot 4 , Rummell's Commercial Subdivision

1"-1.5" Caliper Diameter Tree
1.5"-2" Caliper Diameter Tree
Shrub
Seeded Open Space

LICENSED PROFESSIONAL ENGINEER
LACY CROELL
23838
IOWA

I hereby certify that this engineering document was prepared by me or under my direct personal supervision and that I am a duly licensed Professional Engineer under the laws of the State of Iowa.

Lacy Croell 4/21/17
Lacy Croell, P.E. Date

License Number 23838

My License Renewal Date is December 31, 2018

Pages or sheets covered by this seal:
1-2

MARK	REVISION	DATE	BY

Engineer: LMC | Checked By: TAC | Scale: 1"=50'
Technician: DJD | Date: 06-21-17 | Field Bk: Pg:
Project No: 1160878 | Sheet 1

CROELL REDI-MIX SITE PLAN

WEST BRANCH, IOWA

SITE PLAN

SNYDER & ASSOCIATES, INC.

5005 BOWLING STREET S.W.
CEDAR RAPIDS, IA 52404
319-362-9394 | www.snyder-associates.com

Project No: 1160878

Sheet 1

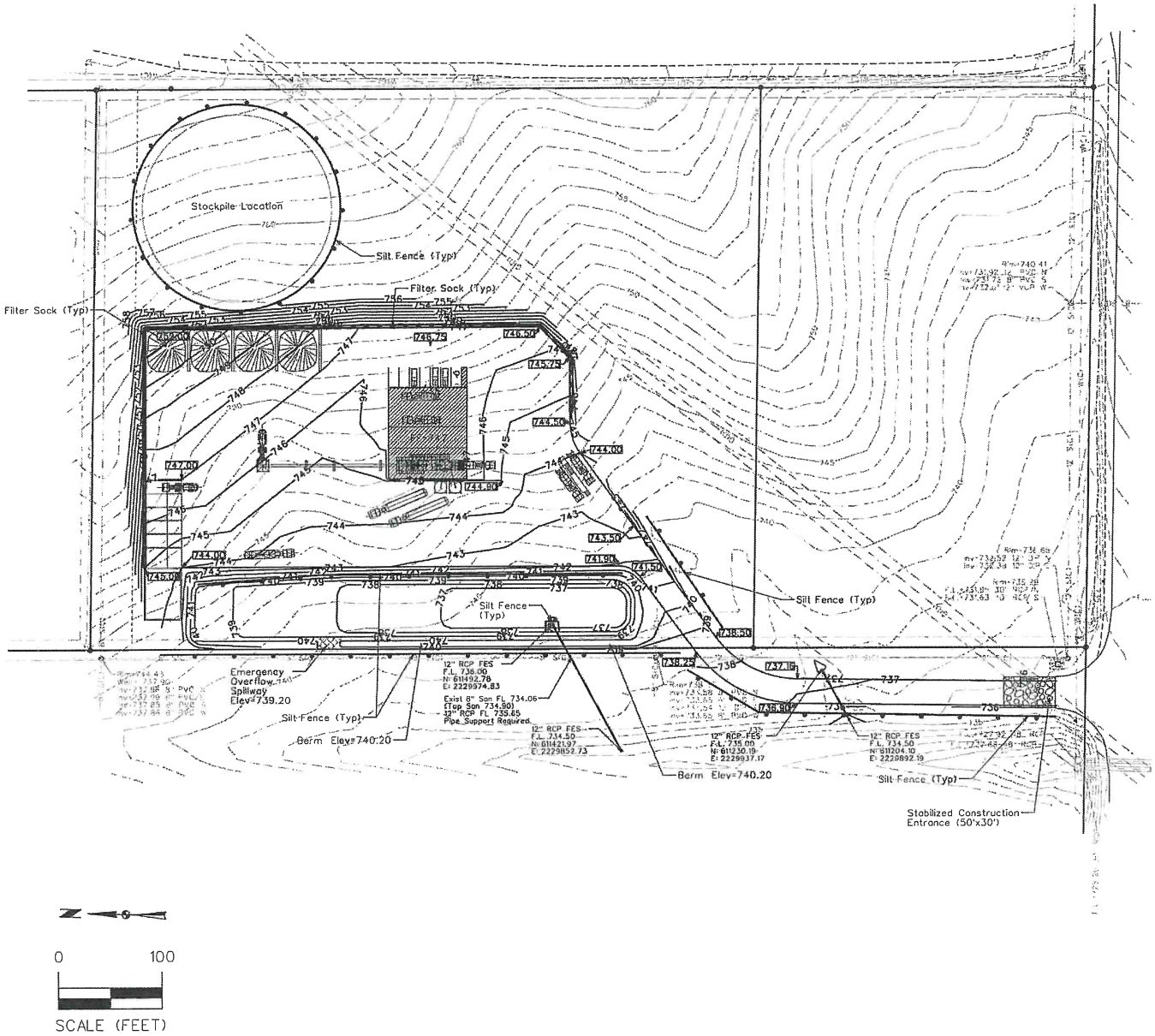

POLLUTION PREVENTION NOTES

A.POLLUTION PREVENTION AND EROSION PROTECTION

1.CODE COMPLIANCE: THE CONTRACTOR IS RESPONSIBLE FOR COMPLIANCE WITH ALL POTENTIAL POLLUTION AND SOIL EROSION CONTROL REQUIREMENTS OF THE IOWA CODE, THE IOWA DEPARTMENT OF NATURAL RESOURCES (IDNR) NPDES PERMIT, THE U.S. CLEAN WATER ACT AND ANY LOCAL ORDINANCES. THE CONTRACTOR SHALL TAKE ALL NECESSARY STEPS TO PROTECT AGAINST EROSION AND POLLUTION FROM THIS PROJECT SITE AND ALL OFF-SITE BORROW OR DEPOSIT AREAS DURING PERFORMANCE OR AS A RESULT OF PERFORMANCE.

2.DAMAGE CLAIMS: THE CONTRACTOR WILL HOLD THE OWNER AND ARCHITECT / ENGINEER HARMLESS FROM ANY AND ALL CLAIMS OF ANY TYPE WHATSOEVER RESULTING FROM DAMAGES TO ADJOINING PUBLIC OR PRIVATE PROPERTY, INCLUDING REASONABLE ATTORNEY FEES INCURRED TO OWNER. FURTHER, IF THE CONTRACTOR FAILS TO TAKE NECESSARY STEPS TO PROMPTLY REMOVE EARTH SEDIMENTATION OR DEBRIS WHICH COMES ONTO ADJOINING PUBLIC OR PRIVATE PROPERTY, THE OWNER MAY, BUT NEED NOT, REMOVE SUCH ITEMS AND DEDUCT THE COST THEREOF FROM AMOUNTS DUE TO THE CONTRACTOR.

B.STORM WATER DISCHARGE PERMIT

1.THIS PROJECT REQUIRES COVERAGE UNDER THE NPDES GENERAL PERMIT NO. 2 FOR STORM WATER DISCHARGES ASSOCIATED WITH CONSTRUCTION ACTIVITIES FROM THE IDNR, AS REQUIRED BY THE ENVIRONMENTAL PROTECTION AGENCY (EPA). THE GENERAL CONTRACTOR AND ALL SUBCONTRACTORS ARE RESPONSIBLE FOR COMPLIANCE WITH AND FULFILLMENT OF ALL REQUIREMENTS OF THE NPDES GENERAL PERMIT NO. 2 INCLUDING CREATING OR MAINTAINING THE STORM WATER POLLUTION PREVENTION PLAN (SWPPP) AND POSSIBLY OBTAINING THE GENERAL PERMIT COVERAGE FROM THE IDNR.

2.ALL DOCUMENTS RELATED TO THE STORM WATER DISCHARGE PERMIT, INCLUDING, BUT NOT LIMITED TO, THE NOTICE OF INTENT, PROOF OF PUBLICATIONS, DISCHARGE AUTHORIZATION LETTER, CURRENT SWPPP, SITE INSPECTION LOG, AND OTHER ITEMS, SHALL BE KEPT ON SITE AT ALL TIMES AND MUST BE PRESENTED TO ANY JURISDICTIONAL AGENCIES UPON REQUEST. FAILURE TO COMPLY WITH THE NPDES PERMIT REQUIREMENTS IS A VIOLATION OF THE CLEAN WATER ACT AND THE CODE OF IOWA.

3.A "NOTICE OF DISCONTINUATION" MUST BE FILED WITH THE IDNR UPON FINAL STABILIZATION OF THE DISTURBED SITE AND REMOVAL OF ALL TEMPORARY EROSION CONTROL MEASURES. ALL PLANS, INSPECTION REPORTS, AND OTHER DOCUMENTS MUST BE RETAINED FOR A PERIOD OF THREE YEARS AFTER PROJECT COMPLETION. THE CONTRACTOR SHALL RETAIN A RECORD COPY AND PROVIDE THE ORIGINAL DOCUMENTS TO THE OWNER UPON PROJECT ACCEPTANCE AND/OR SUBMITTAL OF THE NOTICE OF DISCONTINUATION.

C.POLLUTION PREVENTION PLAN:

1.THE STORM WATER POLLUTION PREVENTION PLAN (SWPPP) IS A SEPARATE DOCUMENT IN ADDITION TO THESE PLAN DRAWINGS. THE CONTRACTOR SHOULD REFER TO THE SWPPP FOR ADDITIONAL REQUIREMENTS AND MODIFICATIONS TO THE POLLUTION PREVENTION PLAN MADE DURING CONSTRUCTION.

2.THE SWPPP ILLUSTRATES GENERAL MEASURES AND BEST MANAGEMENT PRACTICES (BMP) FOR COMPLIANCE WITH THE PROJECT'S NPDES PERMIT COVERAGE. ALL BMP'S AND EROSION CONTROL MEASURES REQUIRED AS A RESULT OF CONSTRUCTION ACTIVITIES ARE THE RESPONSIBILITY OF THE CONTRACTOR TO IDENTIFY, NOTE AND IMPLEMENT. ADDITIONAL BMP'S FROM THOSE SHOWN ON THE PLAN MAY BE REQUIRED.

3.THE SWPPP AND SITE MAP SHOULD BE EXPEDITIOUSLY REVISED TO REFLECT CONSTRUCTION PROGRESS AND CHANGES AT THE PROJECT SITE.

4.THE CONTRACTOR IS RESPONSIBLE FOR COMPLIANCE WITH ALL REQUIREMENTS OF THE GENERAL PERMIT AND SWPPP, INCLUDING, BUT NOT LIMITED TO, THE FOLLOWING BMP'S UNLESS INFEASIBLE OR NOT APPLICABLE:

a.UTILIZE OUTLET STRUCTURES THAT WITHDRAW WATER FROM THE SURFACE WHEN DISCHARGING FROM BASINS, PROVIDE AND MAINTAIN NATURAL BUFFERS AROUND SURFACE WATERS, DIRECT STORM WATER TO VEGETATED AREAS TO INCREASE SEDIMENT REMOVAL AND MAXIMIZE STORM WATER INFILTRATION, AND MINIMIZE SOIL COMPACTION.

b.INSTALL PERIMETER AND FINAL SEDIMENT CONTROL MEASURES SUCH AS SILT BARRIERS, DITCH CHECKS, DIVERSION BERMS, OR SEDIMENTATION BASINS DOWNSTREAM OF SOIL DISTURBING ACTIVITIES PRIOR TO SITE CLEARING AND GRADING OPERATIONS.

c.PRESERVE EXISTING VEGETATION IN AREAS NOT NEEDED FOR CONSTRUCTION AND LIMIT TO A MINIMUM THE TOTAL AREA DISTURBED BY CONSTRUCTION OPERATIONS AT ANY TIME.

d.MAINTAIN ALL TEMPORARY AND PERMANENT EROSION CONTROL MEASURES IN WORKING ORDER, INCLUDING CLEANING, REPAIRING, REPLACEMENT, AND SEDIMENT REMOVAL THROUGHOUT THE PERMIT PERIOD. CLEAN OR REPLACE SILT CONTROL DEVICES WHEN THE MEASURES HAVE LOST 50% OF THEIR ORIGINAL CAPACITY.

e.INSPECT THE PROJECT AREA AND CONTROL DEVICES (BY QUALIFIED PERSONNEL ASSIGNED BY THE CONTRACTOR) EVERY SEVEN CALENDAR DAYS. RECORD THE FINDINGS OF THESE INSPECTIONS AND ANY RESULTING ACTIONS IN THE SWPPP WITH A COPY SUBMITTED WEEKLY TO THE OWNER OR ENGINEER DURING CONSTRUCTION. REVISE THE SWPPP AND IMPLEMENT ANY RECOMMENDED MEASURES WITHIN 7 DAYS.

f.PREVENT ACCUMULATION OF EARTH AND DEBRIS FROM CONSTRUCTION ACTIVITIES ON ADJOINING PUBLIC OR PRIVATE PROPERTIES, INCLUDING STREETS, DRIVEWAYS, SIDEWALKS, DRAINAGEWAYS, OR UNDERGROUND SEWERS. REMOVE ANY ACCUMULATION OF EARTH OR DEBRIS IMMEDIATELY AND TAKE REMEDIAL ACTIONS FOR FUTURE PREVENTION.

g.INSTALL NECESSARY CONTROL MEASURES SUCH AS SILT BARRIERS, EROSION CONTROL MATS, MULCH, DITCH CHECKS OR RIPRAP AS SOON AS AREAS REACH THEIR FINAL GRADES AND AS CONSTRUCTION OPERATIONS PROGRESS TO ENSURE CONTINUOUS RUNOFF CONTROL. PROVIDE INLET AND OUTLET CONTROL MEASURES AS SOON AS STORM SEWERS ARE INSTALLED.

h.RESPREAD A MINIMUM OF 4 INCHES OF TOPSOIL (INCLUDING TOPSOIL FOUND IN SOD) ON ALL DISTURBED AREAS, EXCEPT WHERE PAVEMENT, BUILDINGS OR OTHER IMPROVEMENTS ARE LOCATED.

i.STABILIZE UNDEVELOPED, DISTURBED AREAS WITH MULCH, TEMPORARY SEED MIX, PERMANENT SEED MIX, OR SOD AS SOON AS PRACTICAL UPON COMPLETION OR DELAY OF GRADING OPERATIONS. INITIATE STABILIZATION MEASURES NO LATER THAN 14 CALENDAR DAYS AFTER CONSTRUCTION ACTIVITY HAS FINISHED OR IS PLANNED TO BE DELAYED MORE THAN 21 CALENDAR DAYS.

j.COORDINATE LOCATIONS OF STAGING AREAS WITH THE OWNER AND RECORD IN THE SWPPP. UNLESS NOTED OTHERWISE, STAGING AREAS SHOULD CONTAIN THE FOLLOWING: JOB TRAILERS, FUELING / VEHICLE MAINTENANCE AREA, TEMPORARY SANITARY FACILITIES, MATERIALS STORAGE, AND CONCRETE WASHOUT FACILITY. CONTROL RUNOFF FROM STAGING AREAS WITH DIVERSION BERMS AND/OR SILT BARRIERS AND DIRECT TO A SEDIMENT BASIN OR OTHER CONTROL DEVICE WHERE POSSIBLE. CONCRETE WASHOUT MUST BE CONTAINED ONSITE.

k.REMOVE ALL TEMPORARY EROSION CONTROL MEASURES AND SITE WASTE PRIOR TO FILING OF THE "NOTICE OF DISCONTINUATION".

MARK	REVISION	DATE	BY

Engineer: LMC | Checked By: TAC | Scale: 1"= 100'
Technician: DJD | Date: 06-21-17 | Field Bk: | Pg:
Project No: 1160878 | Sheet 2

CROELL REDI-MIX SITE PLAN

GRADING AND EROSION CONTROL PLAN

WEST BRANCH, IOWA

SNYDER & ASSOCIATES, INC.
5005 BOWLING STREET S.W.
CEDAR RAPIDS, IA 52404
319-362-9394 | www.snyderassociates.com

Project No: 1160878
Sheet 2

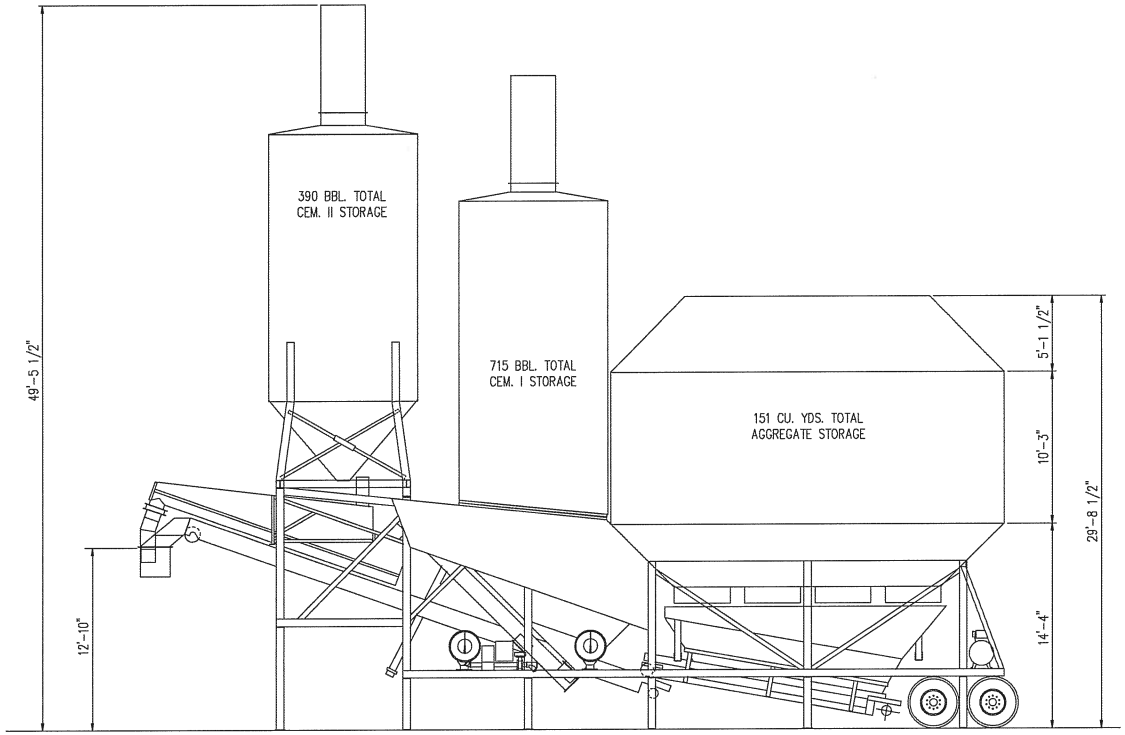

NOTES:

(1) k = 1000 LBS.

(2) ALL LOADS OCCUR AT THE BOTTOM OF BASE PLATES, TOP OF FOUNDATION.

(3) WIND LOADS ARE BASED ON UNIFORM BUILDING CODE (1982), 90 MPH.

(4) CONSULT WITH A REPUTABLE PROFESSIONAL ENGINEER FOR THE DESIGN OF THE FOUNDATION.

(5) THE CONCRETE EQUIPMENT CO DOES NOT ASSUME RESPONSIBILITY FOR FOUNDATION DESIGN.

(6) IMPORTANT: IF INSTALLING PLANT IN A PERMANENT LOCATION IT MAY BE DESIRABLE TO DESIGN FOUNDATION FOR FUTURE ADD ON STORAGE MODULES. CONSULT FACTORY FOR REVISED FOUNDATION LOADINGS.

(7) EXTEND FOOTINGS BELOW FROST LINE.

(8) BE SURE TO CHECK TRUCK HEIGHT BEFORE POURING DRIVEWAY AT ELEVATION 100.0'. CONVEYOR DISCHARGE HOOD GIVES 12'-10" CLEARANCE TO LOWEST POINT (STEEL) AND 11'-0" CLEARANCE TO BOTTOM OF DISCHARGE SHROUD WITH DRIVEWAY AT EL. 100.0'.

FOUNDATION LOADING SUMMARY (PER COLUMN)			
COLUMN	MAX. COLUMN LOAD	MAX. UPLIFT LOAD	MAX. SIDE LOAD
F	61 k	9.7 k	6.6 k
A	86 k	17.5 k	5.6 k
B	106 k	4.2 k	-0-
C	121 k	15.8 k	8.9 k
D	139 k	5.9 k	-0-
E	81 k	7.9 k	6.6 k

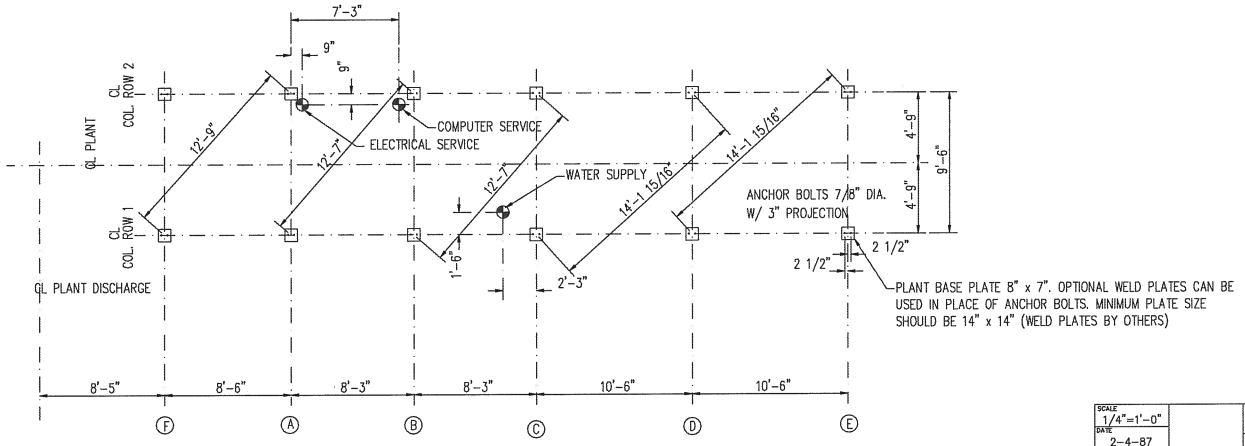

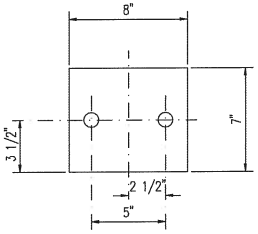

TYPICAL PLANT BASE PLATE

REVISED 2/16/87 (RAISED PLANT 6")

SCALE 1/4"=1'-0"	TITLE FOUNDATION LAYOUT	CON-E-CO CONCRETE EQUIPMENT CO. BLAIR, NE 68008 (402)-426-4181	PART NO.
DATE 2-4-87	CUSTOMER SITE-MIX CONCRETE		JOB NO. ----
DRAWN JHS	LOCATION LAFAYETTE, INDIANA		DWG.NO C-3400-F
CHECKED			

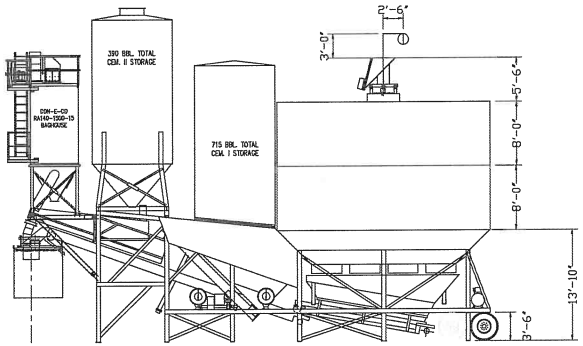

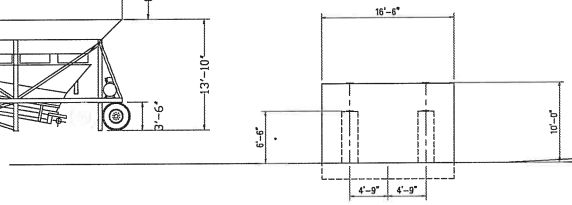

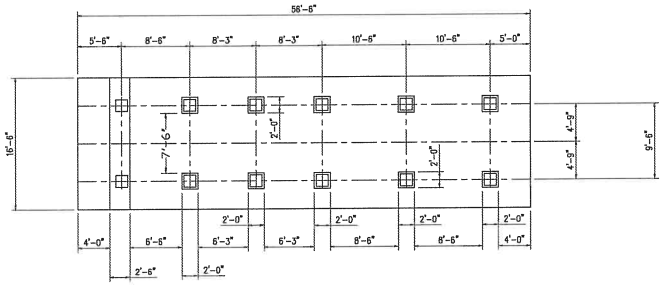

PLAN VIEW

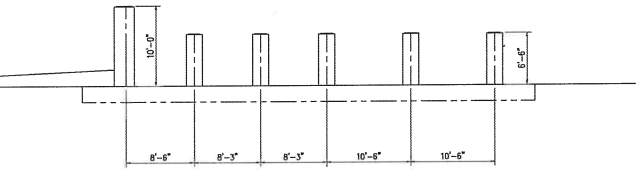

SIDE ELEVATION

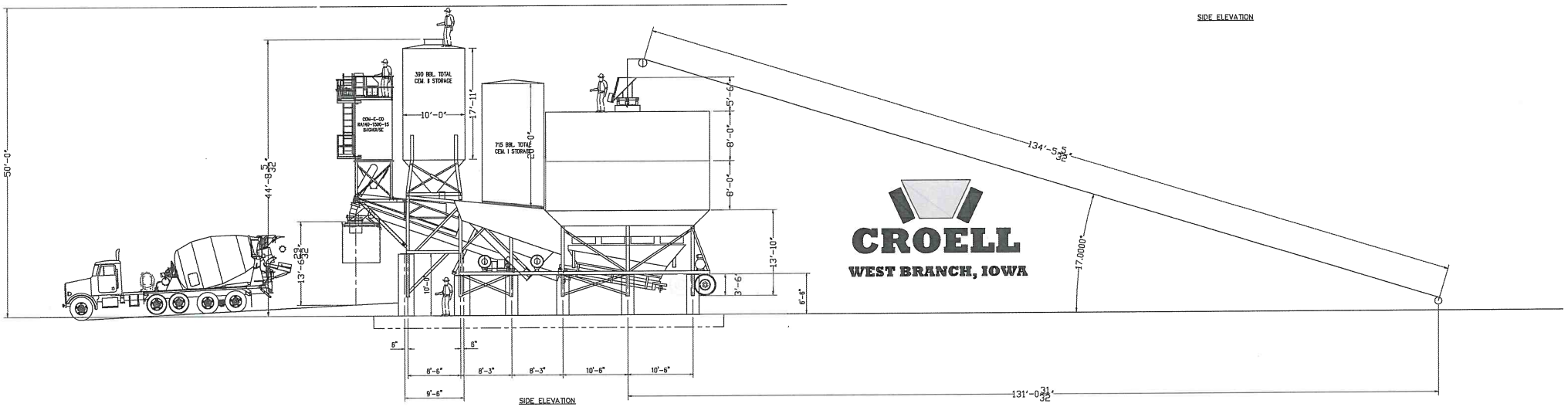

SIDE ELEVATION

CROELL
WEST BRANCH, IOWA

CROELL
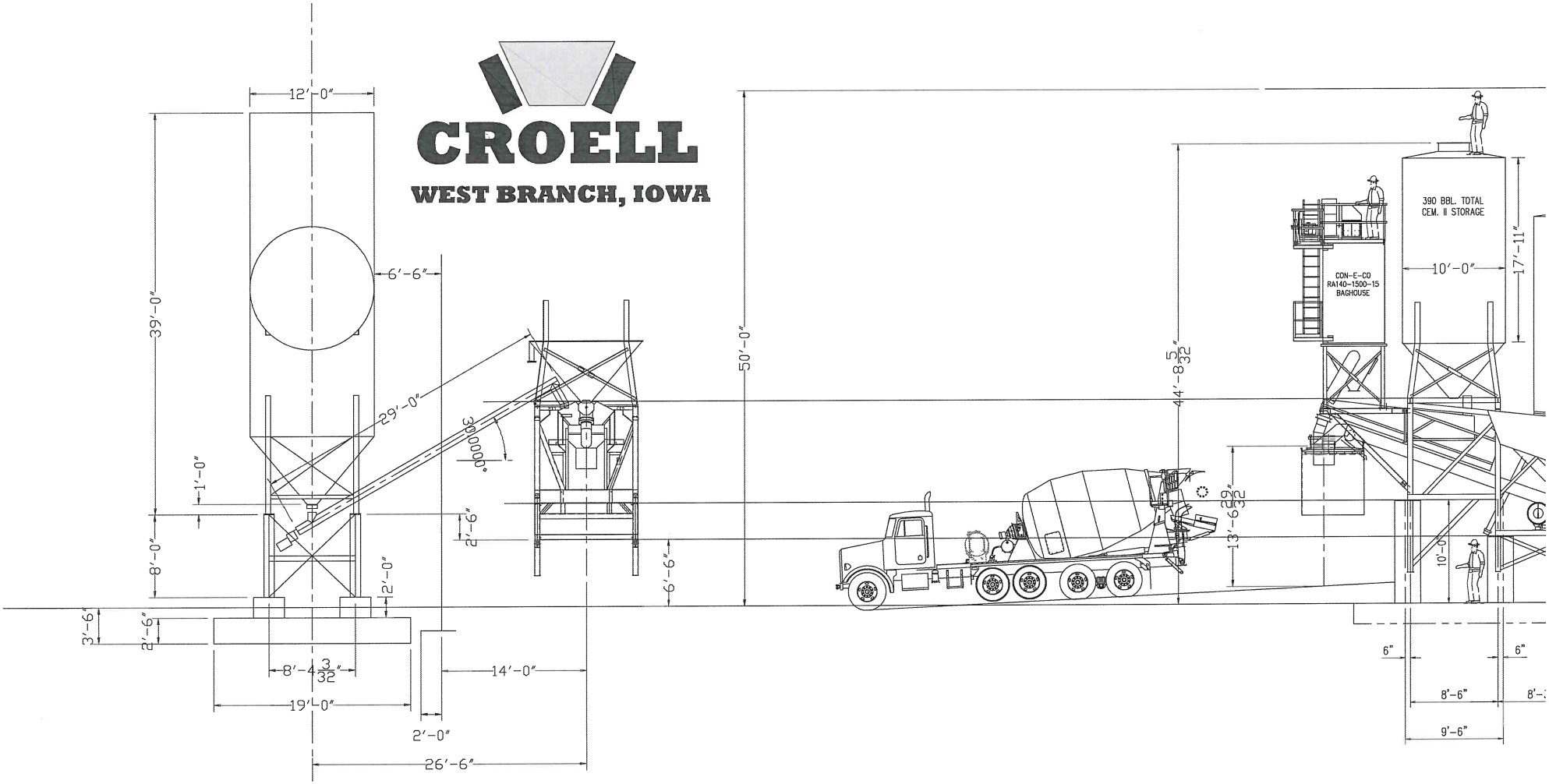
WEST BRANCH, IOWA